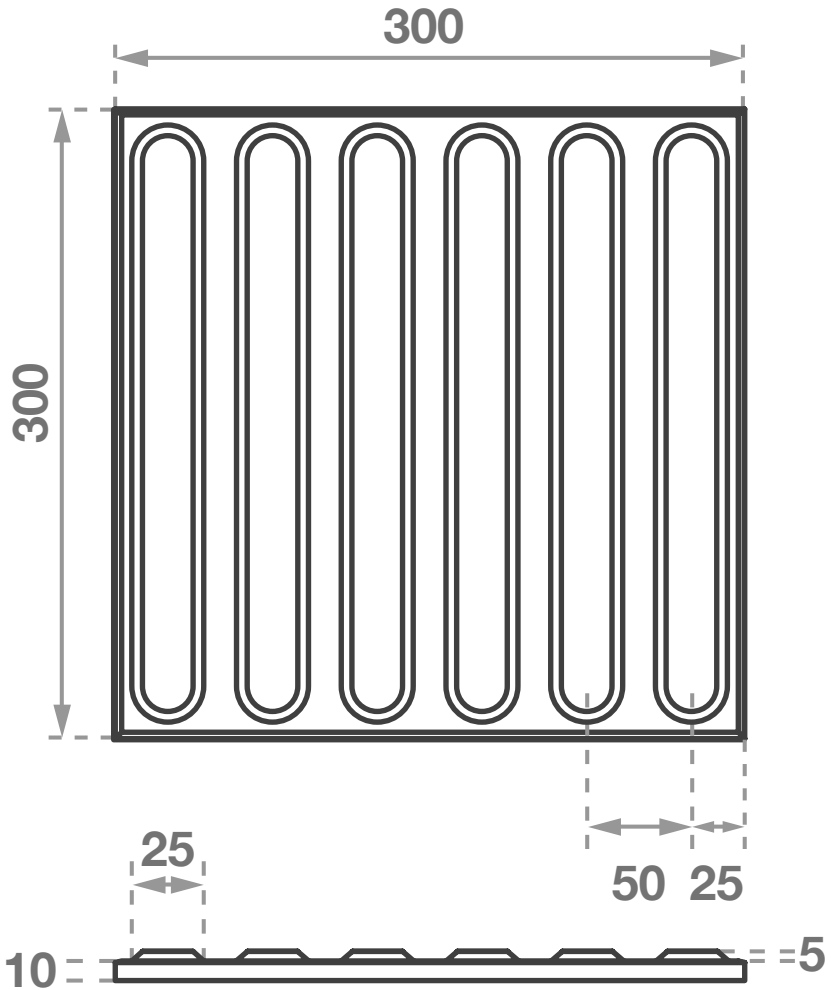CD49